THK-NC328P-XDZ

8 MP IR Varifocal Turret Network Camera

KEY FEATURES

- 1/2.5" Progressive Scan CMOS
- 3840 × 2160@12.5fps
- 2.8 to 12 mm varifocal lens
- Color: 0.018 Lux @ (F1.6, AGC ON), 0 Lux with IR
- H.265+, H.265, H.264+, H.264
- Three streams
- 2 Behavior analyses
- 120dB WDR
- BLC/3D DNR/ROI/HLC
- IP67, IK10
- Built-in micro SD/SDHC/SDXC card slot, up to 128 GB
- 3-Axis adjustment
- IR range: Up to 100 ft
- Anti-IR reflection

THK-NC328P-XDZ		
Camera	**Image Sensor**	1/2.5" Progressive Scan CMOS
	Minimum Illumination	Color: 0.018 lux @ (ƒ/1.6, AGC on), 0 lux with IR
	Shutter Speed	1/3 s to 1/100,000 s
	Slow Shutter	Yes
	Day/Night	IR cut filter
	WDR	120 dB
	Angle Adjustment	Pan: 0° to 355°, tilt: 0° to 75°, rotate: 0° to 355°
Lens	**Lens Type**	Varifocal lens, motorized lens , 2.8 to 12 mm
	Aperture	ƒ/1.6
	FOV	Horizontal FOV: 104° to 29°, vertical FOV: 55° to 17°, diagonal FOV: 125° to 34°
	Lens Mount	Ø14
Illuminator	**IR Range**	Up to 100 ft
	Wavelength	850 nm
Video	**Max. Resolution**	3840 × 2160
	Main Stream	50Hz: 12.5fps (3840 × 2160), 20fps (3072 × 1728), 25fps (2560 × 1440, 1920 × 1080, 1280 × 720) 60Hz: 15fps (3840 × 2160), 20fps (3072 × 1728), 30fps (2560 × 1440, 1920 × 1080, 1280 × 720)
	Sub Stream	50Hz: 25fps (640 × 480, 640 × 360, 320 × 240) 60Hz: 30fps (640 × 480, 640 × 360, 320 × 240)
	Third Stream	50Hz: 25fps (1280 × 720, 640 × 360, 352 × 288) 60Hz: 30fps (1280 × 720, 640 × 360, 352 × 240)
	Video Compression	Main stream/third stream: H.265/H.264 Sub-stream: H.265/H.264/MJPEG
	H.264 Type	Main profile/high profile
	H.264+	Main stream support
	H.265 Type	Main profile/high profile
	H.265+	Main stream support
	Video Bit Rate	32 Kbps to 16 Mbps
	Scalable Video Coding	H.264 and H.265 encoding
	*Note: When the main stream resolution is 3840 × 2160, max frame rate is 12.5 fps (50Hz)/15 fps (60Hz) for all streams. When the main stream resolution is 3072 × 1728, max frame rate is 20 fps for all streams.	
Audio	**Audio Compression**	G722.1/G.711/G726/MP2L2/PCM/MP3
	Audio Bit Rate	64Kbps(G.711)/16Kbps(G.722.1)/16Kbps(G.726)/32-192Kbps(MP2L2)/8Kbps-320Kbps(MP3)
	Environment Noise Filtering	Yes
	Audio Sampling Rate	8 kHz/16 kHz/32 kHz/44.1 kHz/48 kHz
Smart Feature-set	**Smart Event**	Line crossing detection, intrusion detection, face detection
	Basic Event	Motion detection, video tampering alarm, exception (network disconnected, IP address conflict, illegal login, HDD full, HDD error)
	Linkage Method	Trigger recording: memory card, network storage, pre-record and post-record Trigger captured pictures uploading: FTP, HTTP, NAS, Email Trigger notification: HTTP, ISAPI, alarm output, Email
	Region of Interest	1 fixed region for main stream and sub-stream
Image	**Imange Enhancement**	BLC/3D DNR/HLC
	Image Setting	Saturation, brightness, contrast, sharpness, AGC, and white balance adjustable by client software or web browser
	Day/Night Switching	Day/Night/Auto/Schedule/Triggered by Alarm In

THK-NC328P-XDZ

8 MP IR Varifocal Turret Network Camera

THK-NC328P-XDZ		
Network	Network Storage	microSD/SDHC/SDXC card (128 G), local storage and NAS (NFS, SMB/CIFS), ANR Together with high-end Hikvision memory card, memory card encryption and health detection are supported.
	Protocol	TCP/IP, UDP, ICMP, HTTP, HTTPS, FTP, DHCP, DNS, DDNS, RTP, RTSP, RTCP, PPPoE, NTP, UPnP, SMTP, SNMP, IGMP, 802.1X, QoS, IPv6, UDP, Bonjour
	API	ONVIF (PROFILE S, PROFILE G, PROFILE T), ISAPI, SDK
	Security	Password protection, complicated password, HTTPS encryption, 802.1X authentication (EAP-TLS 1.2, EAP-LEAP, EAP-MD5), watermark, IP address filter, basic and digest authentication for HTTP/HTTPS, WSSE and digest authentication for ONVIF, TLS1.2
	Simultaneous Live View	Up to 6 channels
	User/Host	Up to 32 users. 3 user levels: administrator, operator, and user
	Client	iVMS-4200, Hik-Connect, Hik-Central
	Web Browser	Plug-in required live view: IE8+ Plug-in free live view: Chrome 57.0+, Firefox 52.0+, Safari 11+ Local Service: Chrome 41.0+, Firefox 30.0+
Interface	Communication Interface	1 RJ45 10M/100M self-adaptive Ethernet port
	Audio	1 input (line in), 1 output (line out), four-core terminal block, mono sound
	Alarm	1 input, 1 output
	Video Output	No
	Interface Style	Pigtail style interface
	On-board Storage	Built-in Micro SD/SDHC/SDXC slot, up to 128 GB
General	Web Client Language	32 languages English, Russian, Estonian, Bulgarian, Hungarian, Greek, German, Italian, Czech, Slovak, French, Polish, Dutch, Portuguese, Spanish, Romanian, Danish, Swedish, Norwegian, Finnish, Croatian, Slovenian, Serbian, Turkish, Korean, Traditional Chinese, Thai, Vietnamese, Japanese, Latvian, Lithuanian, Portuguese (Brazil)
	General Function	Anti-flicker, three streams, heartbeat, mirror, privacy masks, password reset via e-mail, pixel counter, HTTP listening
	Reset	Reset via reset button on camera body, web browser and client software
	Startup and Operating Conditions	-22 °F to +140 °F, Humidity 95% or less (non-condensing)
	Storage Conditions	-22 °F to +140 °F, Humidity 95% or less (non-condensing)
	Power Supply	12 VDC ± 25%, Φ 5.5 mm coaxial power plug, PoE (802.3af, class 3)
	Power Consumption and Current	12 VDC, 0.92 A, max. 11 W, PoE (802.3af, 36 V to 57 V), 0.35 A to 0.22 A, max. 12. 5W
	Material	Metal
	Dimensions	Camera: Φ 5.4" × 5.0" With Package: 6.7" × 6.7" × 5.9"
	Weight	Camera: Approx. 2.65 lb. With Package: Approx. 3.13 lb.
	EMC	47 CFR Part 15, Subpart B; EN 55032: 2015, EN 61000-3-2: 2014, EN 61000-3-3: 2013, EN 50130-4: 2011 +A1: 2014; AS/NZS CISPR 32: 2015; ICES-003: Issue 6, 2016; KN 32: 2015, KN 35: 2015
	Safety	UL 60950-1, IEC 60950-1:2005 + Am 1:2009 + Am 2:2013, EN 60950-1:2005 + Am 1:2009 + Am 2:2013, IS 13252(Part 1):2010+A1:2013+A2:2015
	Chemisty	2011/65/EU, 2012/19/EU, Regulation (EC) No 1907/2006
	Protection	Ingress protection: IK10 (IEC 62262:2002), IP67 (IEC 60529-2013)
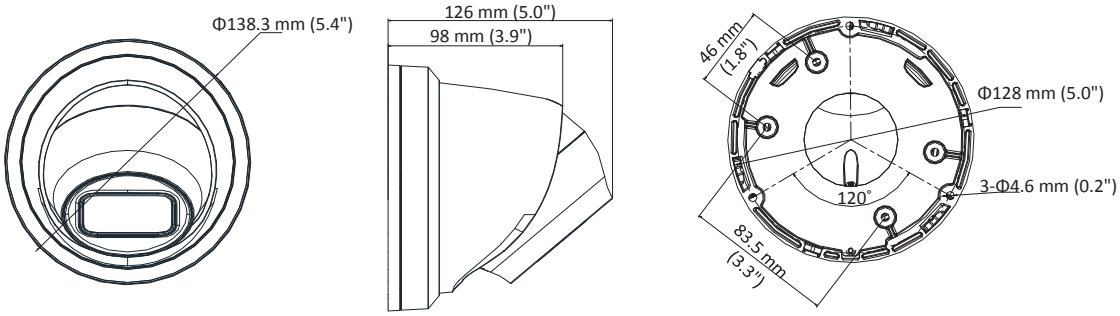
DIMENSIONS